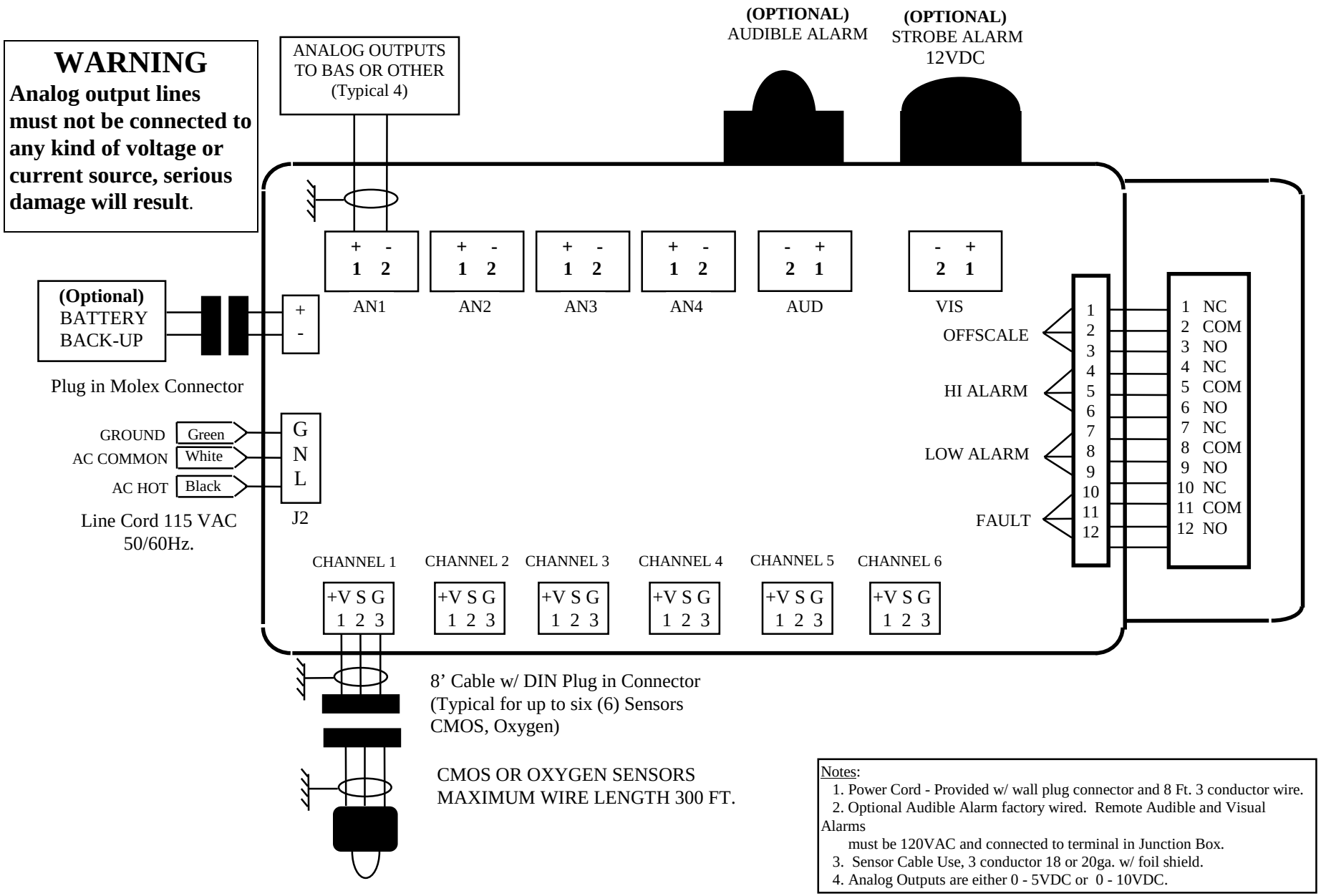

Notes:
1. Power Cord - Provided w/ wall plug connector and 8 Ft. 3 conductor wire.
2. Optional Audible Alarm factory wired. Remote Audible and Visual Alarms must be 120VAC and connected to terminal in Junction Box.
3. Sensor Cable Use, 3 conductor 18 or 20ga. w/ foil shield.
4. Analog Outputs are either 0 - 5VDC or 0 - 10VDC.

Figure 10 - Wiring Diagram

airmet
Work with Confidence
Distributed by:
Air-Met Scientifc Pty Ltd
Air-Met Sales/Service
P: 1800 000 744
F: 1800 000 774
E: sales@airmet.com.au
Air-Met Rental
P: 1300 137 067
E: hire@airmet.com.au
W: www.airmet.com.au